Reg. No. | | | | | | | | | | |

[14ME61]

SIXTH SEMESTER B.TECH EXAMINATION, JUNE – 2019

FINITE ELEMENT METHOD

Time: 3 Hours **Maximum Marks:70**

Instructions:

1. Answer any **FIVE** full questions, choosing at least TWO questions from each part.
2. Missing data, if any, may be suitably assumed.

PART – A

1. a. State principle of minimum potential energy and derive an expression for potential energy of three dimensional elastic body. **08**

   b. Derive an expression for a cantilever beam subjected to concentrated load P at the free end. (Use Rayleigh-Ritz method) **06**

2. a. Distinguish iso, sub and super parametric elements with examples. **08**

   b. Briefly explain **06**

   i. Node numbering scheme

   ii. Location of nodes

3. a. Explain convergence requirements and compatibility requirements. **08**

   b. Briefly explain **06**

   i. Geometric isotropy

   ii. Pascal triangle

4. a. Derive shape functions for quadratic bar element in terms of both natural coordinates and global coordinates. **08**

   b. Derive shape functions for four noded quadrilateral elements. **06**

PART - B

5. Determine the displacements, element stresses and support reactions for the following structure shown in fig. 5 (Use elimination approach). **14**

p_1=60kN

p_2=75kN

A_1=2400mm^2

A_2=1200mm^2

A_3=600mm^2

E=200GPa

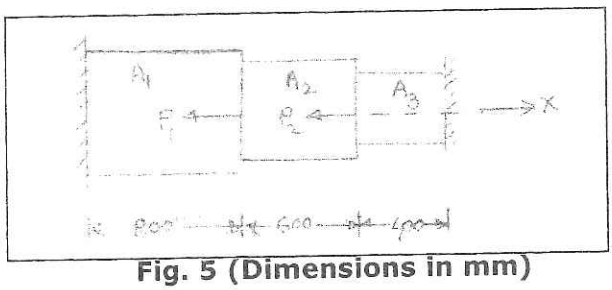

Fig. 5 (Dimensions in mm)

JAIN (Deemed-to-be University) Learning Resource Centre Jain Global Campus Ramanagar-112

6. a Derive an expression for stiffness matrix for a tetrahedral element. **07**

b What are the hermite shape functions? Derive the hermite shape function for a beam element. **07**

7. Determine the temperature distribution in the rectangular fin as shown in fig.7. Assume steady –state and only conduction process. Take heat generated inside the fin as $400 W/m^3$? **14**

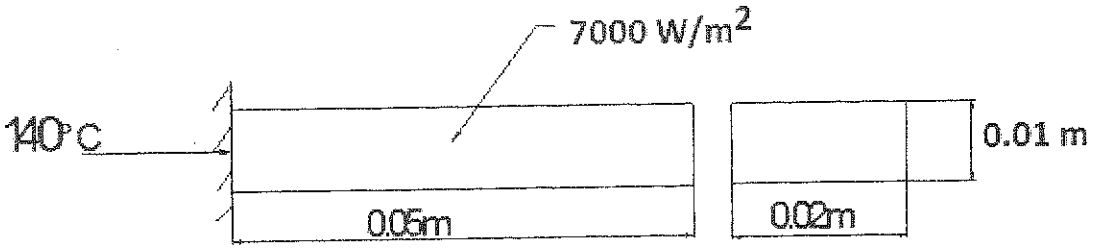

Fig. 7

8. For the two bar truss as shown in fig. 8, determine the nodal displacements, element stresses and reaction forces. It is given that $E=2x10^5 MPa$ and $A=600mm^2$ for all elements. **14**

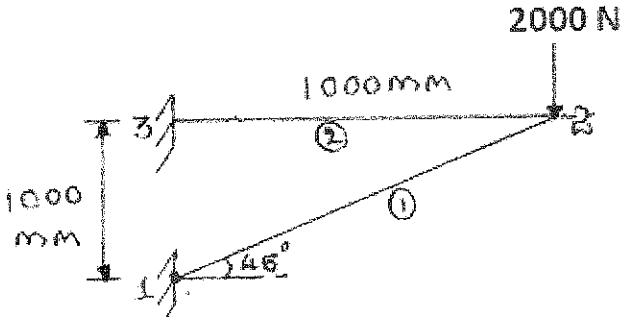

Fig. 8